Control Wiring Diagram

YG200

KGT 0311

Table of contents

YG200 (KGT)

Over view
Control box
I/O conveyor board -1-
I/O conveyor board -2-
I/O conveyor board -3-
I/O head front A (HEAD A)
I/O head front B (HEAD B)
I/O head rear A (HEAD C)
I/O head rear B (HEAD D)
Operation panel sel.
FIX 20 feeder structure
FES 20 feeder structure
FES 20 safety circuit (non stop)
FES 20 safety circuit (normal)
Power transformer terminal
Power circuit
Emergency circuit
Air circuit (YG200-F)
Air circuit (YG200-S)
Air circuit (YG200-F/FES)
Wiring parts list

Over view

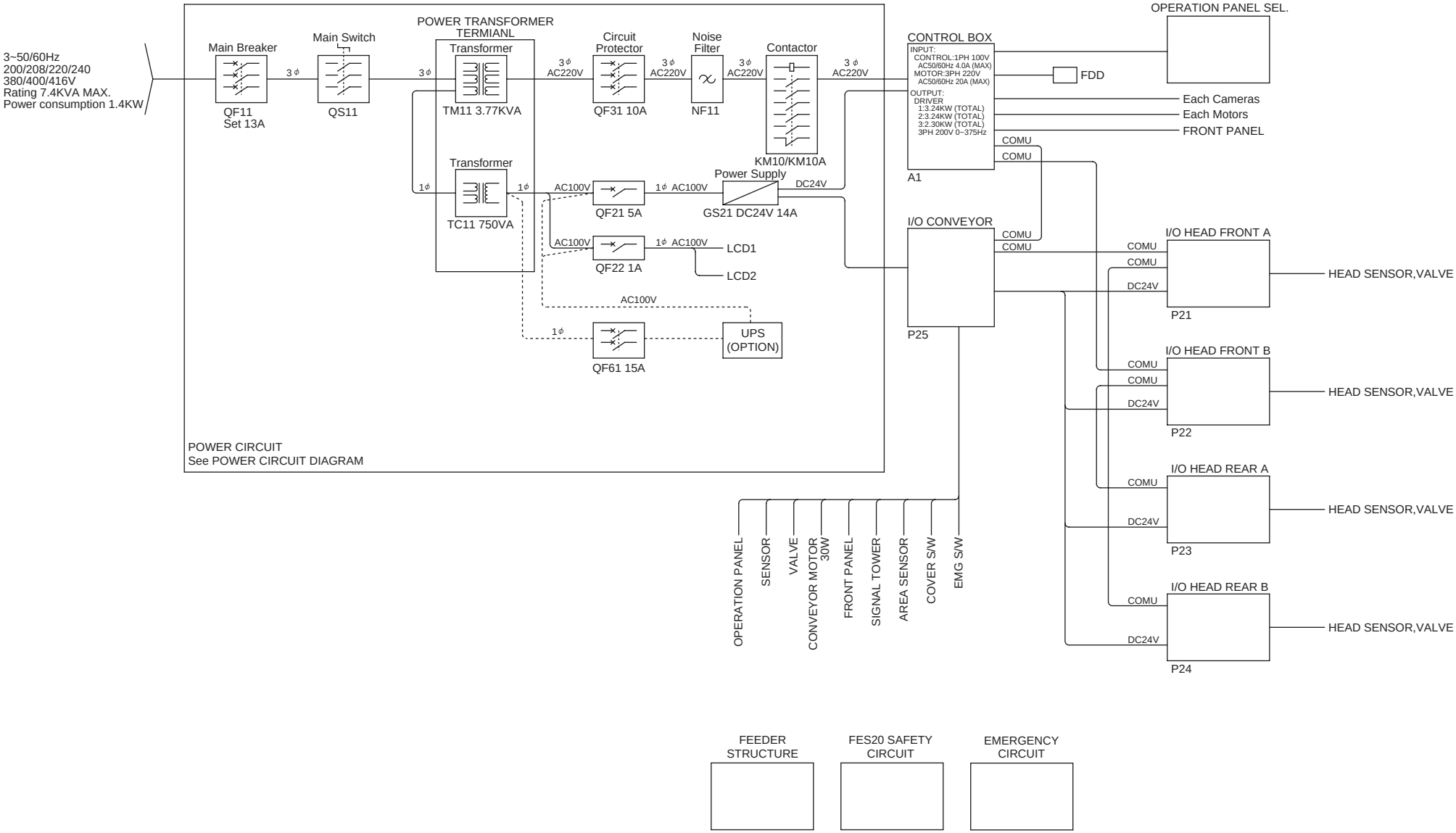
3~50/60Hz
200/208/220/240
380/400/416V
Rating 7.4KVA MAX.
Power consumption 1.4KW
Main Breaker
QF11
Set 13A
Main Switch
QS11
POWER TRANSFORMER
TERMIANL
Transformer
TM11 3.77KVA
Circuit
Protector
QF31 10A
Noise
Filter
NF11
Contactor
KM10/KM10A
Transformer
TC11 750VA
Power Supply
GS21 DC24V 14A
QF21 5A
QF22 1A
LCD1
LCD2
QF61 15A
UPS
(OPTION)
AC100V
DC24V
POWER CIRCUIT
See POWER CIRCUIT DIAGRAM
CONTROL BOX
INPUT:
CONTROL:1PH 100V
AC50/60Hz 4.0A (MAX)
MOTOR:3PH 220V
AC50/60Hz 20A (MAX)
OUTPUT:
DRIVER
1:3.24KW (TOTAL)
2:3.24KW (TOTAL)
3:2.30KW (TOTAL)
3PH 200V 0~375Hz
A1
OPERATION PANEL SEL.
FDD
Each Cameras
Each Motors
FRONT PANEL
COMU
I/O CONVEYOR
P25
I/O HEAD FRONT A
P21
I/O HEAD FRONT B
P22
I/O HEAD REAR A
P23
I/O HEAD REAR B
P24
DC24V
HEAD SENSOR,VALVE
OPERATION PANEL
SENSOR
VALVE
CONVEYOR MOTOR 30W
FRONT PANEL
SIGNAL TOWER
AREA SENSOR
COVER S/W
EMG S/W
FEEDER STRUCTURE
FES20 SAFETY CIRCUIT
EMERGENCY CIRCUIT

Control box

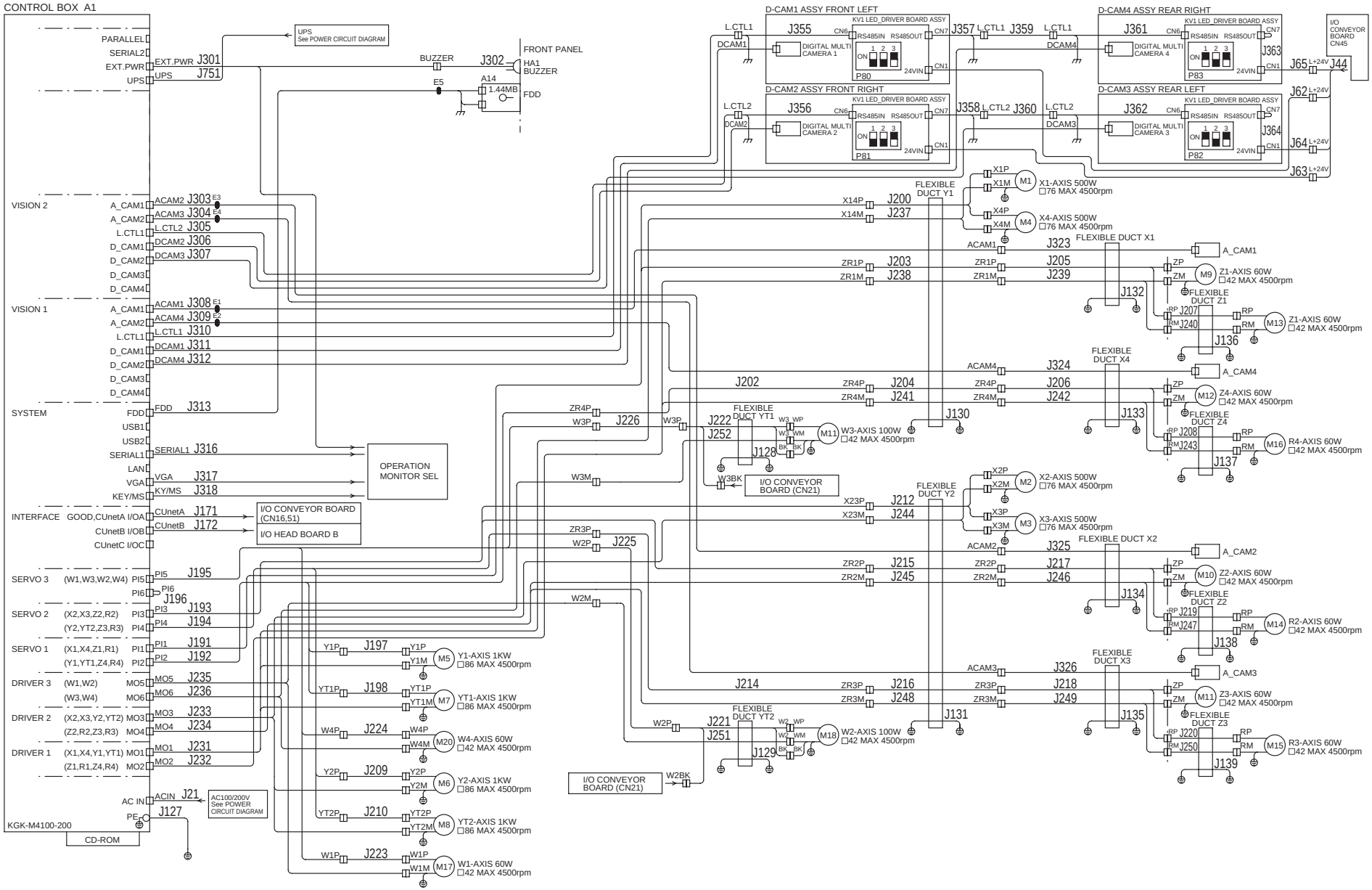
CONTROL BOX A1
PARALLEL
SERIAL2
EXT.PWR J301
EXT.PWR
UPS J751
UPS
UPS See POWER CIRCUIT DIAGRAM
BUZZER
J302
FRONT PANEL
HA1 BUZZER
E5
A14
1.44MB
FDD
D-CAM1 ASSY FRONT LEFT
J355
KV1 LED_DRIVER BOARD ASSY
DIGITAL MULTI CAMERA 1
P80
L.CTL1
DCAM1
J357
D-CAM2 ASSY FRONT RIGHT
J356
DIGITAL MULTI CAMERA 2
P81
L.CTL2
DCAM2
J358
D-CAM4 ASSY REAR RIGHT
J361
DIGITAL MULTI CAMERA 4
P83
J363
J359
DCAM4
D-CAM3 ASSY REAR LEFT
J362
DIGITAL MULTI CAMERA 3
P82
J364
J360
DCAM3
I/O CONVEYOR BOARD CN45
J65
J44
J62
J64
J63
L+24V
VISION 2
A_CAM1
A_CAM2
L.CTL1
D_CAM1
D_CAM2
D_CAM3
D_CAM4
ACAM2 J303
ACAM3 J304
L.CTL2 J305
DCAM2 J306
DCAM3 J307
VISION 1
ACAM1 J308
ACAM4 J309
L.CTL1 J310
DCAM1 J311
DCAM4 J312
SYSTEM
FDD J313
USB1
USB2
SERIAL1 J316
LAN
VGA J317
KY/MS J318
KEY/MS
OPERATION MONITOR SEL
INTERFACE
GOOD,CUnetA I/OA
CUnetB I/OB
CUnetC I/OC
CUnetA J171
CUnetB J172
I/O CONVEYOR BOARD (CN16,51)
I/O HEAD BOARD B
SERVO 3 (W1,W3,W2,W4) PI5 J195
PI6 J196
SERVO 2 (X2,X3,Z2,R2) PI3 J193
(Y2,YT2,Z3,R3) PI4 J194
SERVO 1 (X1,X4,Z1,R1) PI1 J191
(Y1,YT1,Z4,R4) PI2 J192
DRIVER 3 (W1,W2) MO5 J235
(W3,W4) MO6 J236
DRIVER 2 (X2,X3,Y2,YT2) MO3 J233
(Z2,R2,Z3,R3) MO4 J234
DRIVER 1 (X1,X4,Y1,YT1) MO1 J231
(Z1,R1,Z4,R4) MO2 J232
AC IN
ACIN J21
PE
J127
AC100/200V See POWER CIRCUIT DIAGRAM
KGK-M4100-200
CD-ROM
Y1P J197
Y1M
M5 Y1-AXIS 1KW □86 MAX 4500rpm
YT1P J198
YT1M
M7 YT1-AXIS 1KW □86 MAX 4500rpm
W4P J224
W4M
M20 W4-AXIS 60W □42 MAX 4500rpm
Y2P J209
Y2M
M6 Y2-AXIS 1KW □86 MAX 4500rpm
YT2P J210
YT2M
M8 YT2-AXIS 1KW □86 MAX 4500rpm
W1P J223
W1M
M17 W1-AXIS 60W □42 MAX 4500rpm
FLEXIBLE DUCT Y1
X14P J200
X14M J237
X1P
X1M
M1 X1-AXIS 500W □76 MAX 4500rpm
X4P
X4M
M4 X4-AXIS 500W □76 MAX 4500rpm
FLEXIBLE DUCT X1
ACAM1 J323
A_CAM1
ZR1P J203
ZR1M J238
J205
J239
ZP
ZM
M9 Z1-AXIS 60W □42 MAX 4500rpm
J132
FLEXIBLE DUCT Z1
RP J207
RM J240
M13 Z1-AXIS 60W □42 MAX 4500rpm
J136
FLEXIBLE DUCT X4
ACAM4 J324
A_CAM4
J202
ZR4P J204
ZR4M J241
J206
J242
M12 Z4-AXIS 60W □42 MAX 4500rpm
J130
J133
FLEXIBLE DUCT Z4
J208
J243
M16 R4-AXIS 60W □42 MAX 4500rpm
J137
ZR4P
W3P J226
W3P
J222
J252
FLEXIBLE DUCT YT1
W3 WP
W3 WM
BK BK
M11 W3-AXIS 100W □42 MAX 4500rpm
J128
W3BK
I/O CONVEYOR BOARD (CN21)
W3M
X2P
X2M
M2 X2-AXIS 500W □76 MAX 4500rpm
FLEXIBLE DUCT Y2
X23P J212
X23M J244
X3P
X3M
M3 X3-AXIS 500W □76 MAX 4500rpm
ZR3P
W2P J225
ACAM2 J325
A_CAM2
FLEXIBLE DUCT X2
ZR2P J215
ZR2M J245
J217
J246
M10 Z2-AXIS 60W □42 MAX 4500rpm
J134
FLEXIBLE DUCT Z2
J219
J247
M14 R2-AXIS 60W □42 MAX 4500rpm
J138
W2M
ACAM3 J326
A_CAM3
FLEXIBLE DUCT X3
J214
ZR3P J216
ZR3M J248
J218
J249
M11 Z3-AXIS 60W □42 MAX 4500rpm
J131
J135
FLEXIBLE DUCT Z3
J220
J250
M15 R3-AXIS 60W □42 MAX 4500rpm
J139
W2P
J221
J251
FLEXIBLE DUCT YT2
W2 WP
W2 WM
BK BK
M18 W2-AXIS 100W □42 MAX 4500rpm
J129
I/O CONVEYOR BOARD (CN21)
W2BK

I/O conveyor board -1-

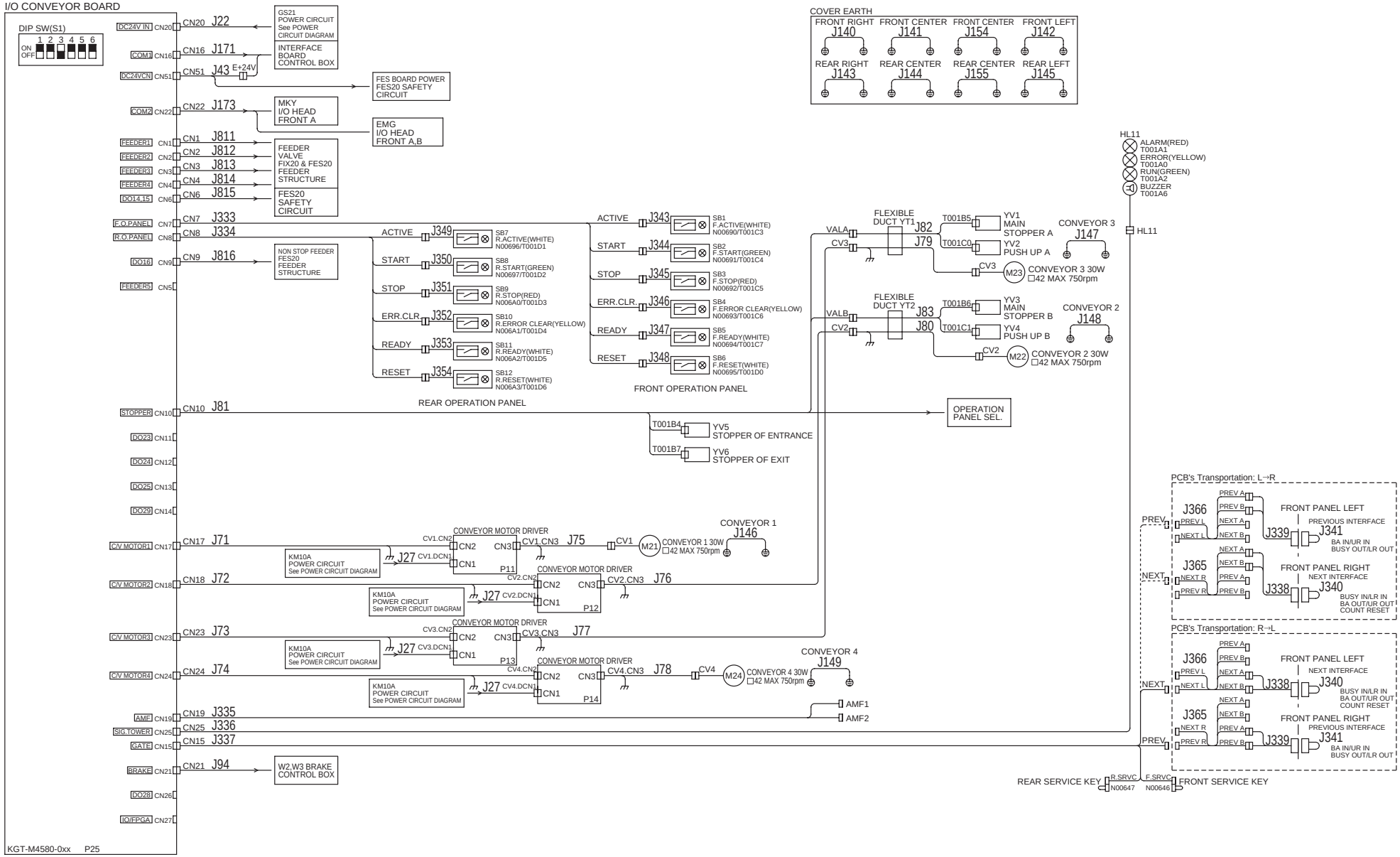

I/O conveyor board -2-

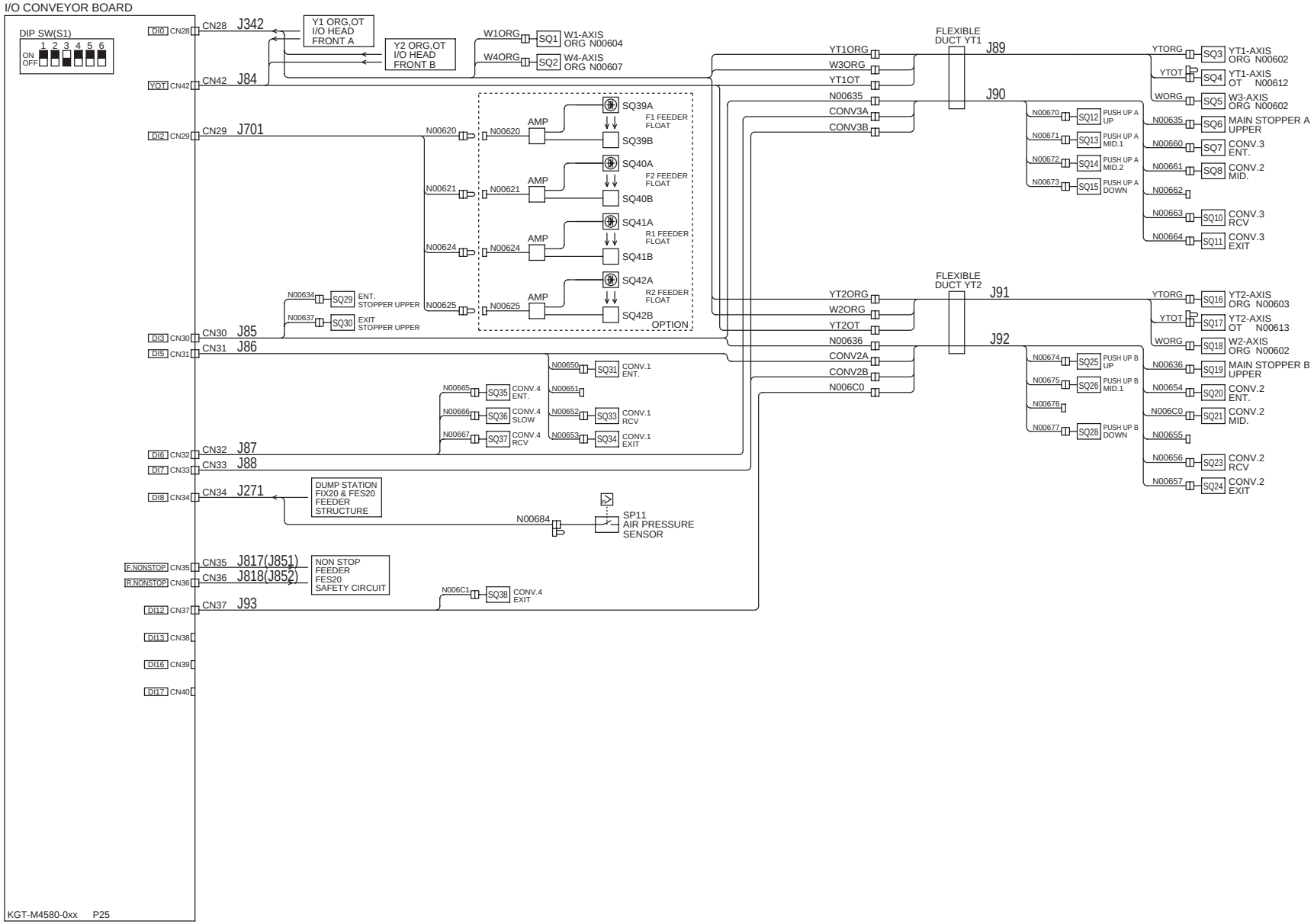

I/O conveyor board -3-

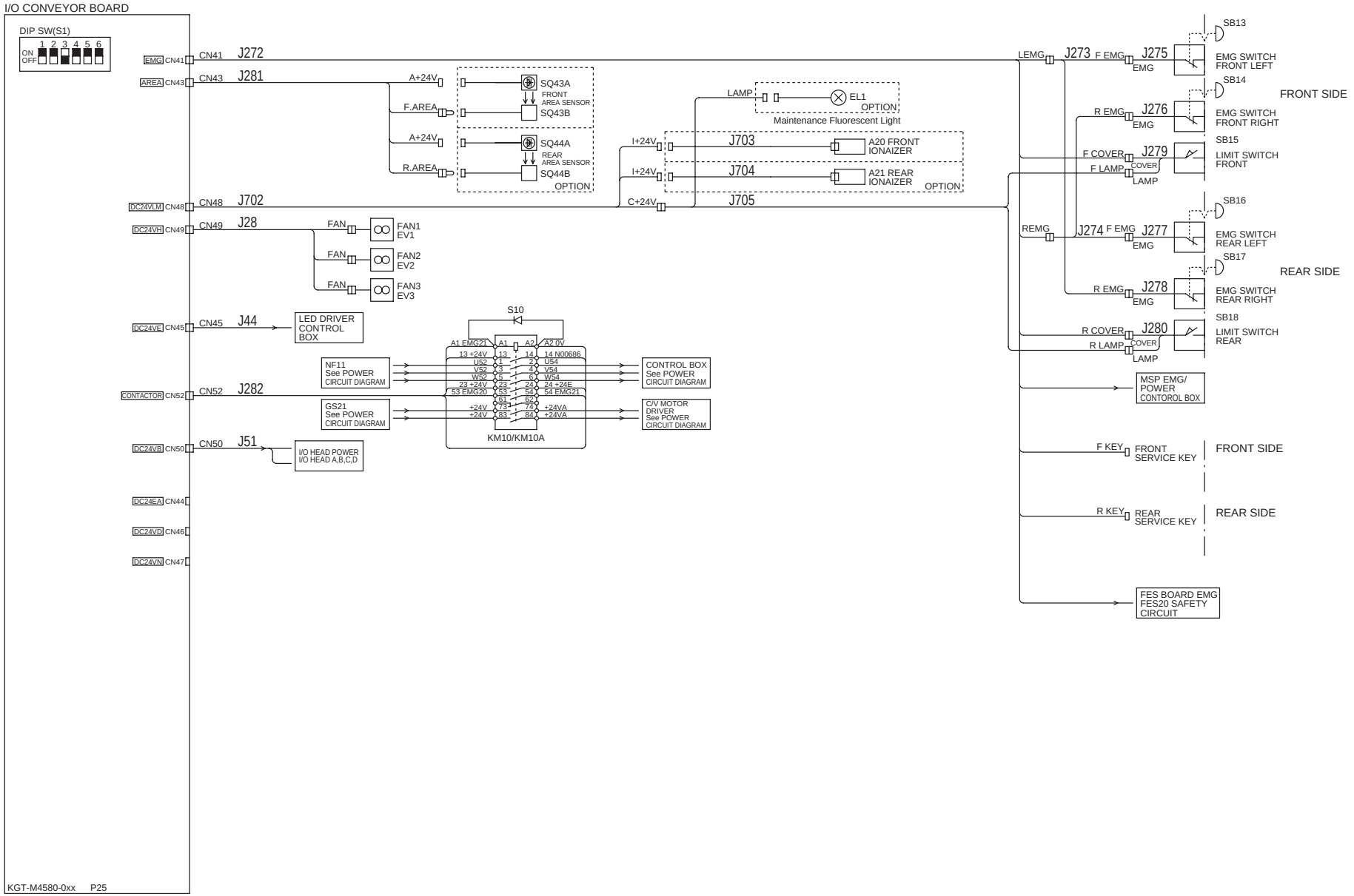

I/O head front A (HEAD A)

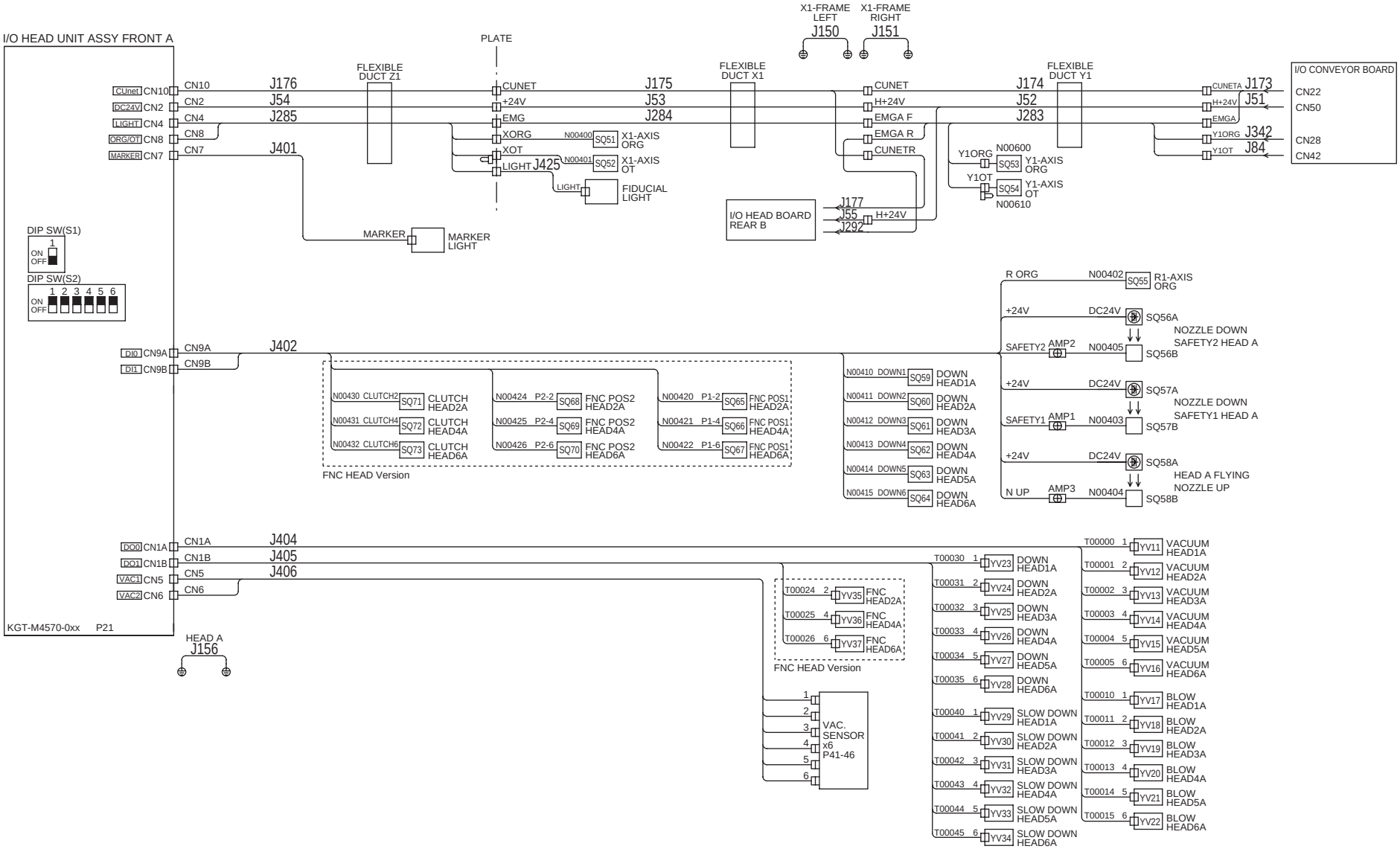

I/O head front B (HEAD B)

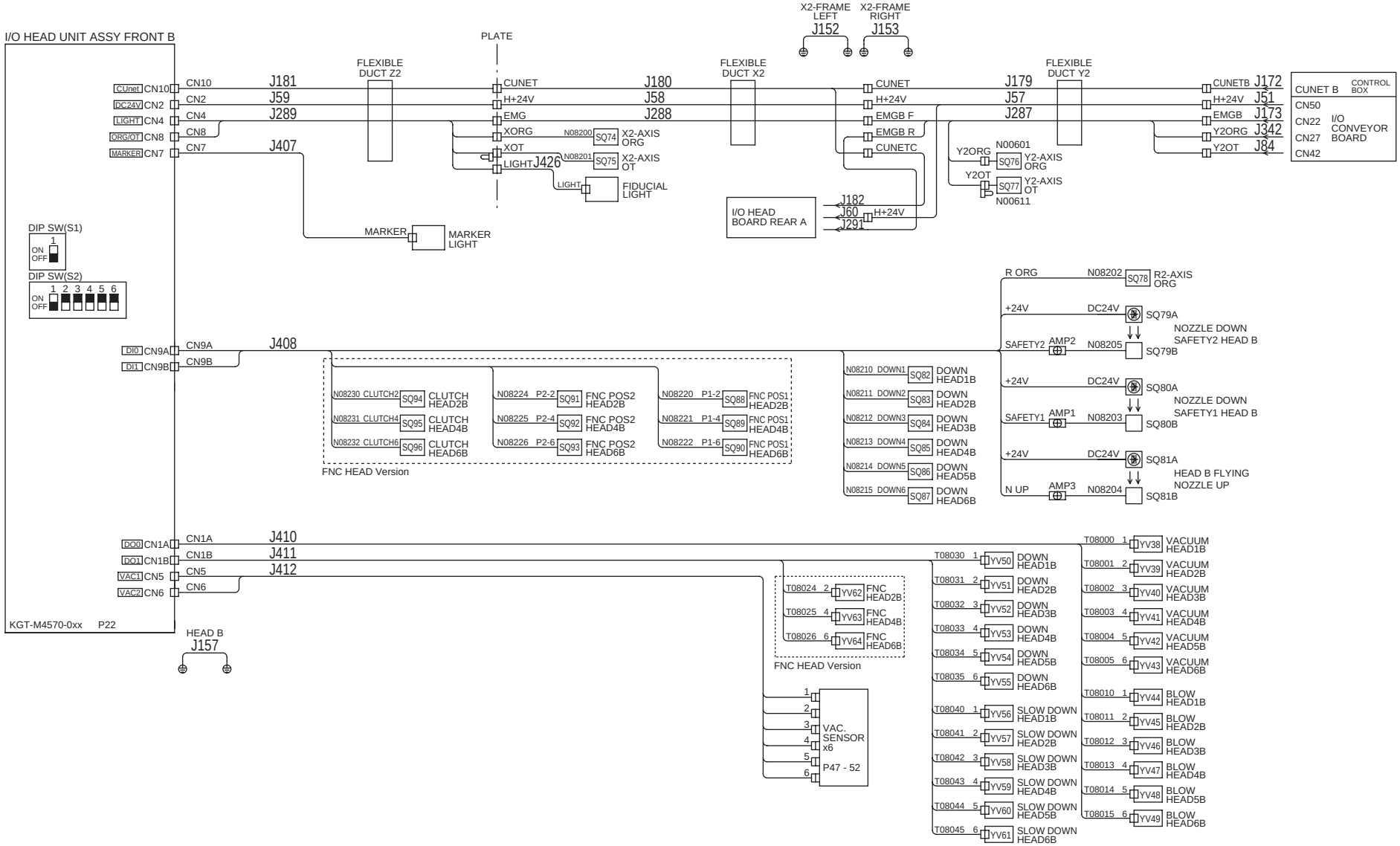

I/O head rear A (HEAD C)

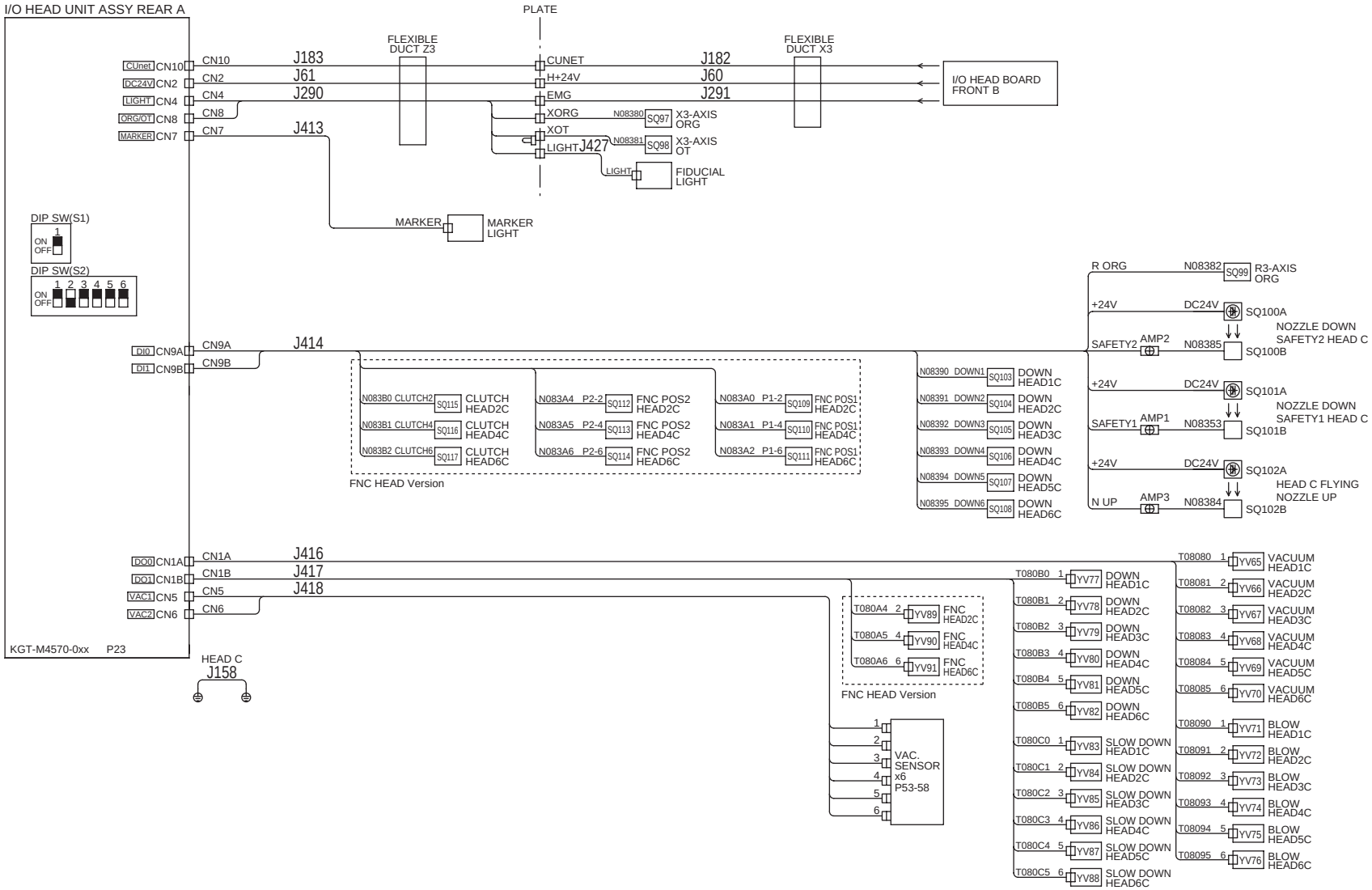

I/O head rear B (HEAD D)

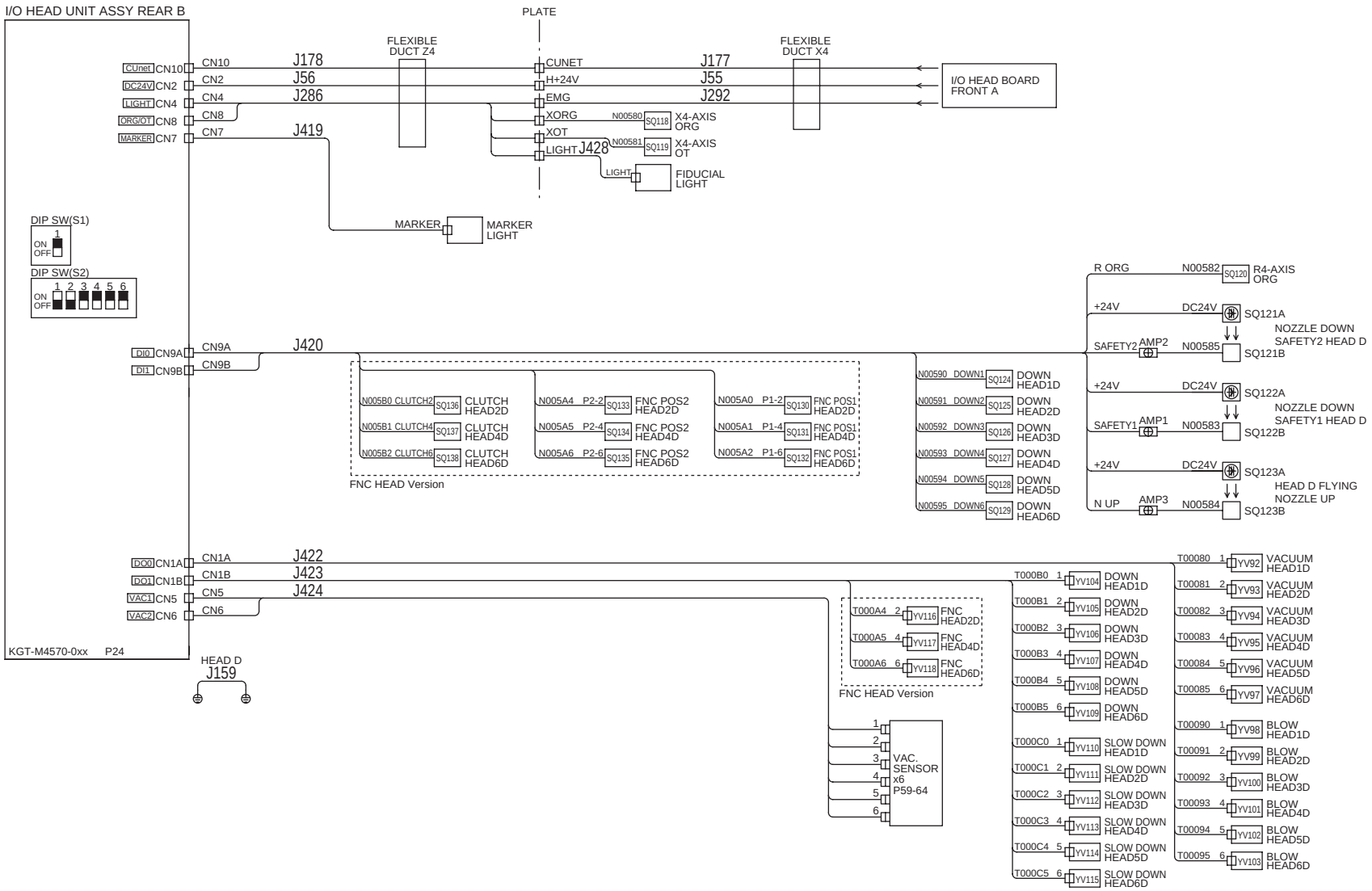

Operation panel sel.

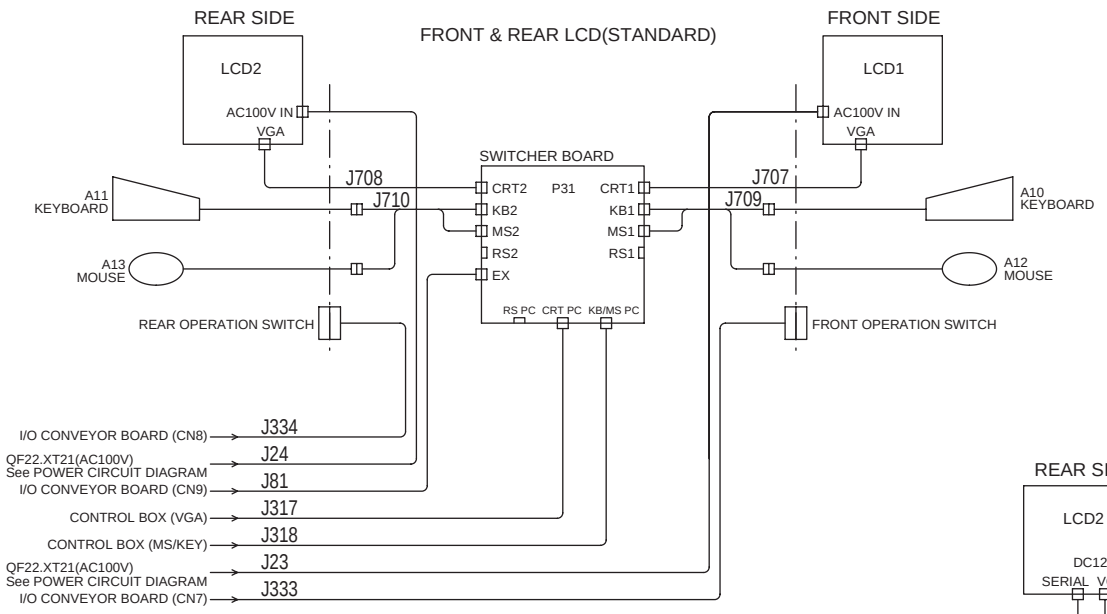

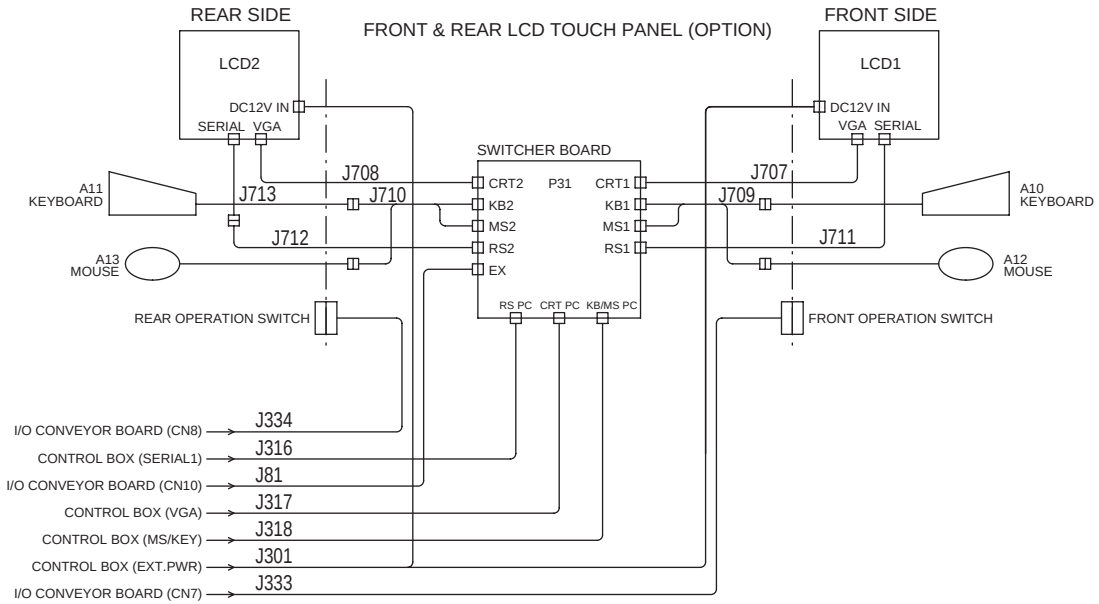

NOTE1:The Harness is attachment for System board.

FIX 20 feeder structure

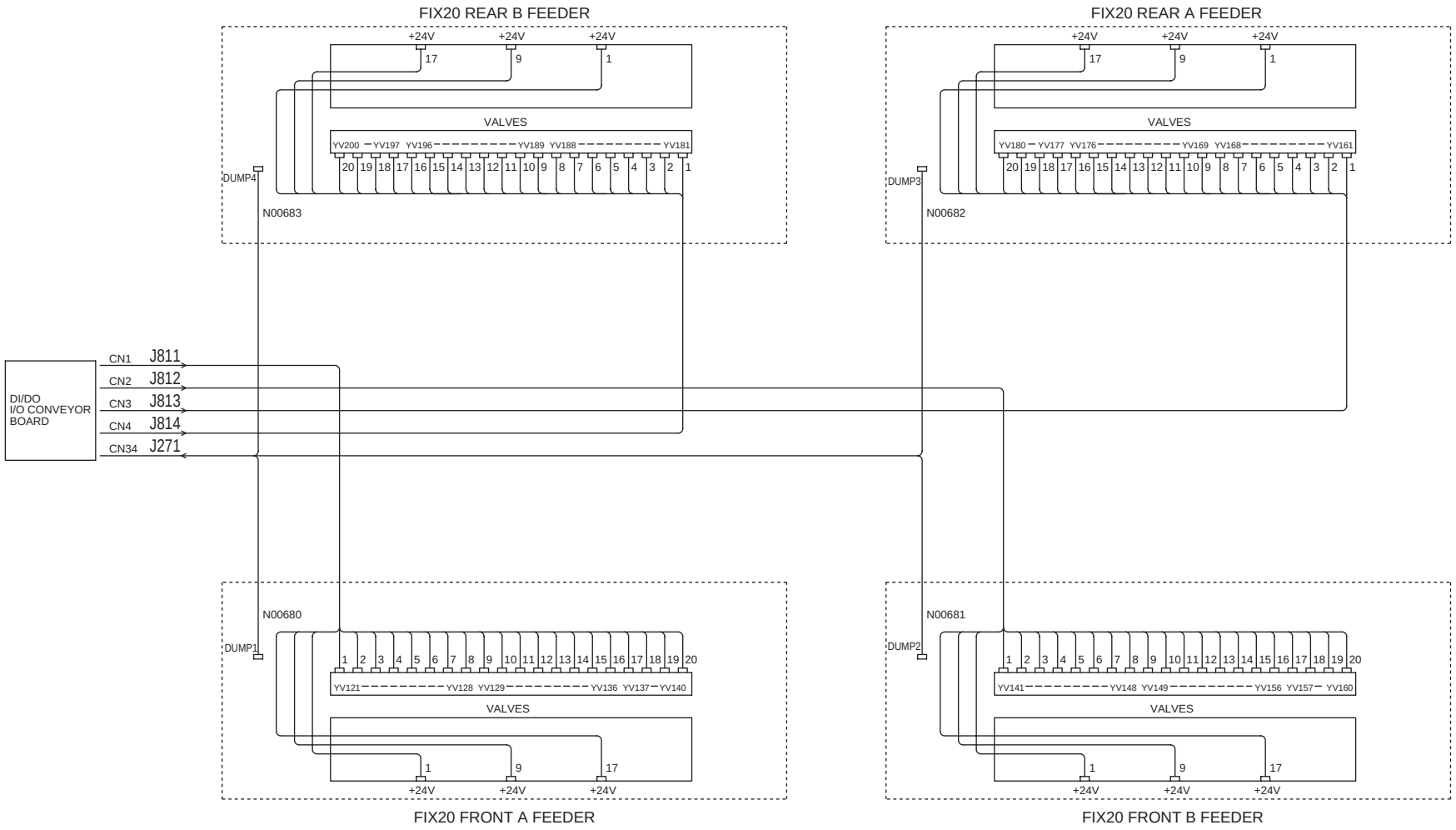

FES 20 feeder structure

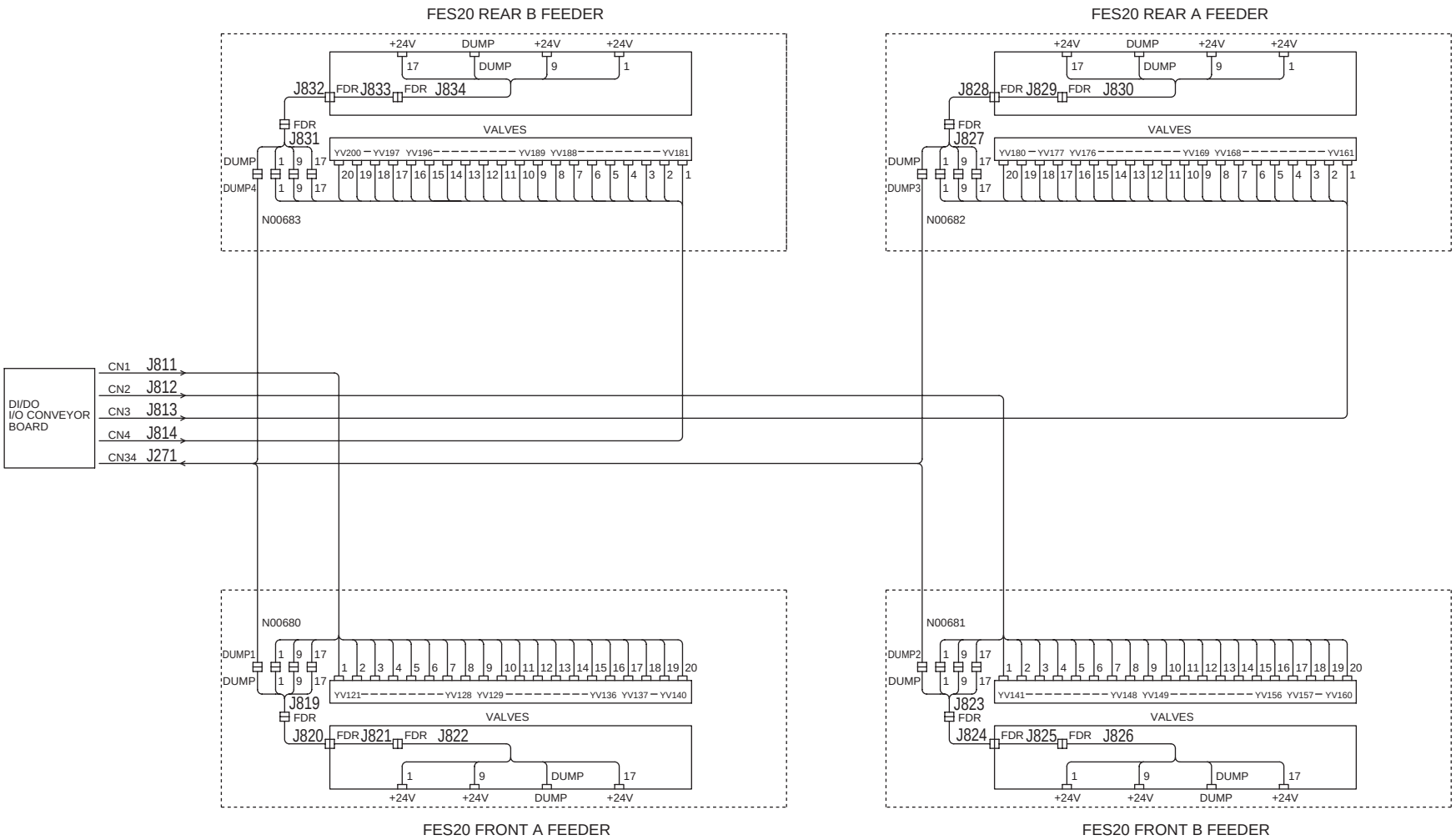

FES 20 safety circuit (non stop)

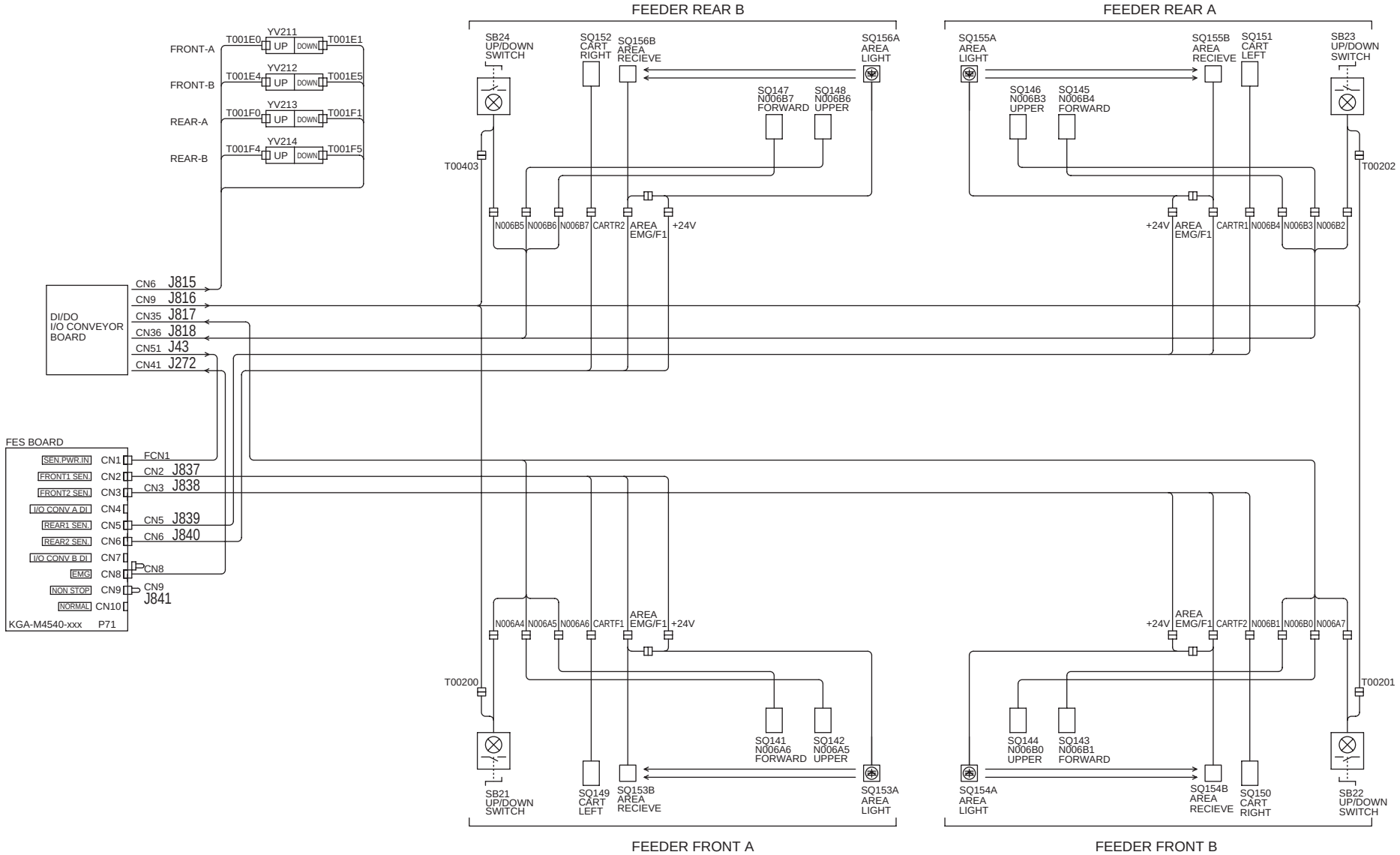

FES 20 safety circuit (normal)

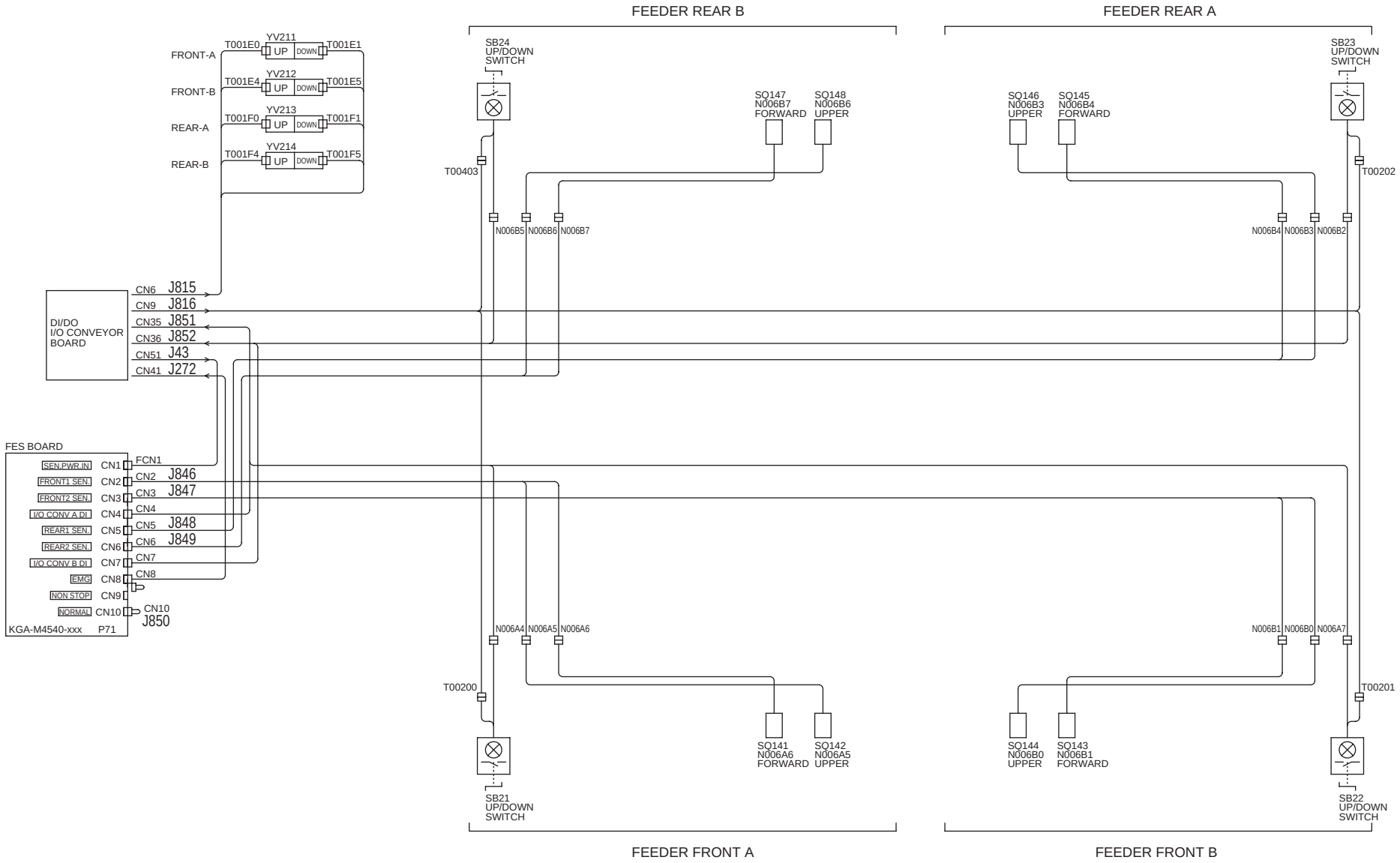

Power transformer terminal

TM11:The selection of POWER SOURCE 3.77KVA

200V	208V	220V	240V	380V	400V	416V
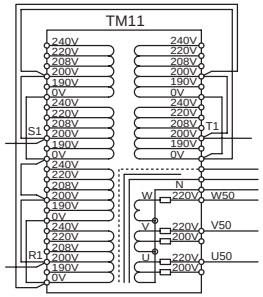	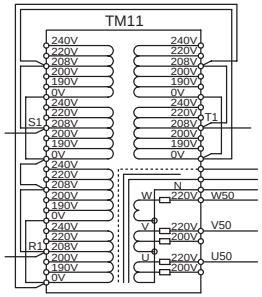	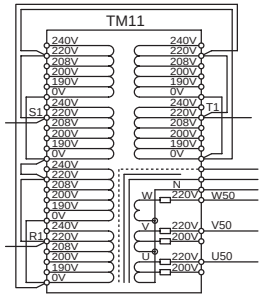	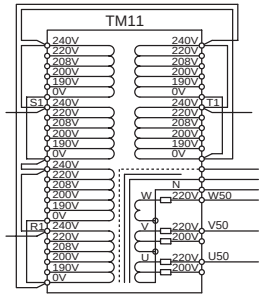	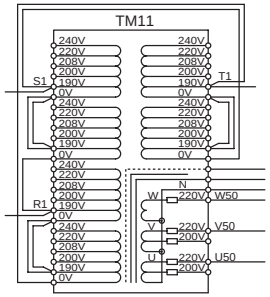	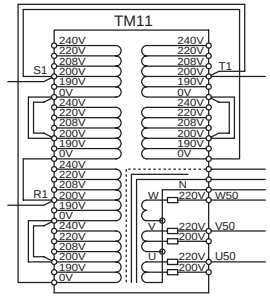	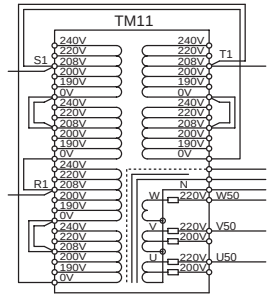
3.77KVA	3.77KVA	3.77KVA	3.77KVA	3.77KVA	3.77KVA	3.77KVA

TC11:The selection of POWER SOURCE 0.75KVA

200V	208V	220V	240V	380V	400V	416V
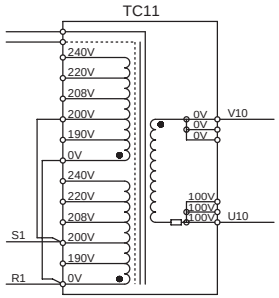	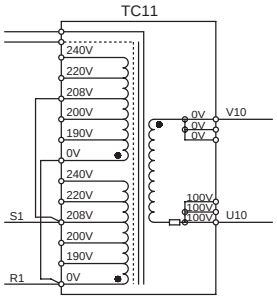	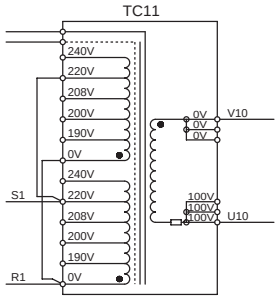	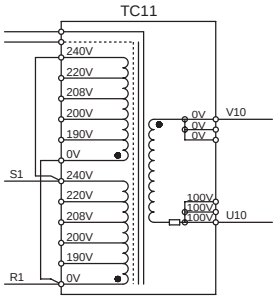	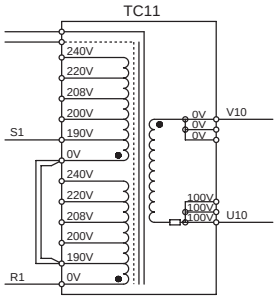	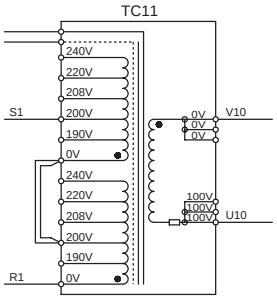	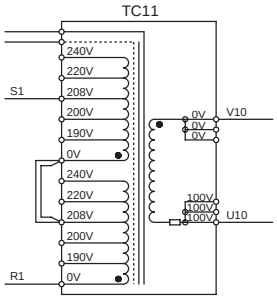
0.75KVA	0.75KVA	0.75KVA	0.75KVA	0.75KVA	0.75KVA	0.75KVA

Power circuit

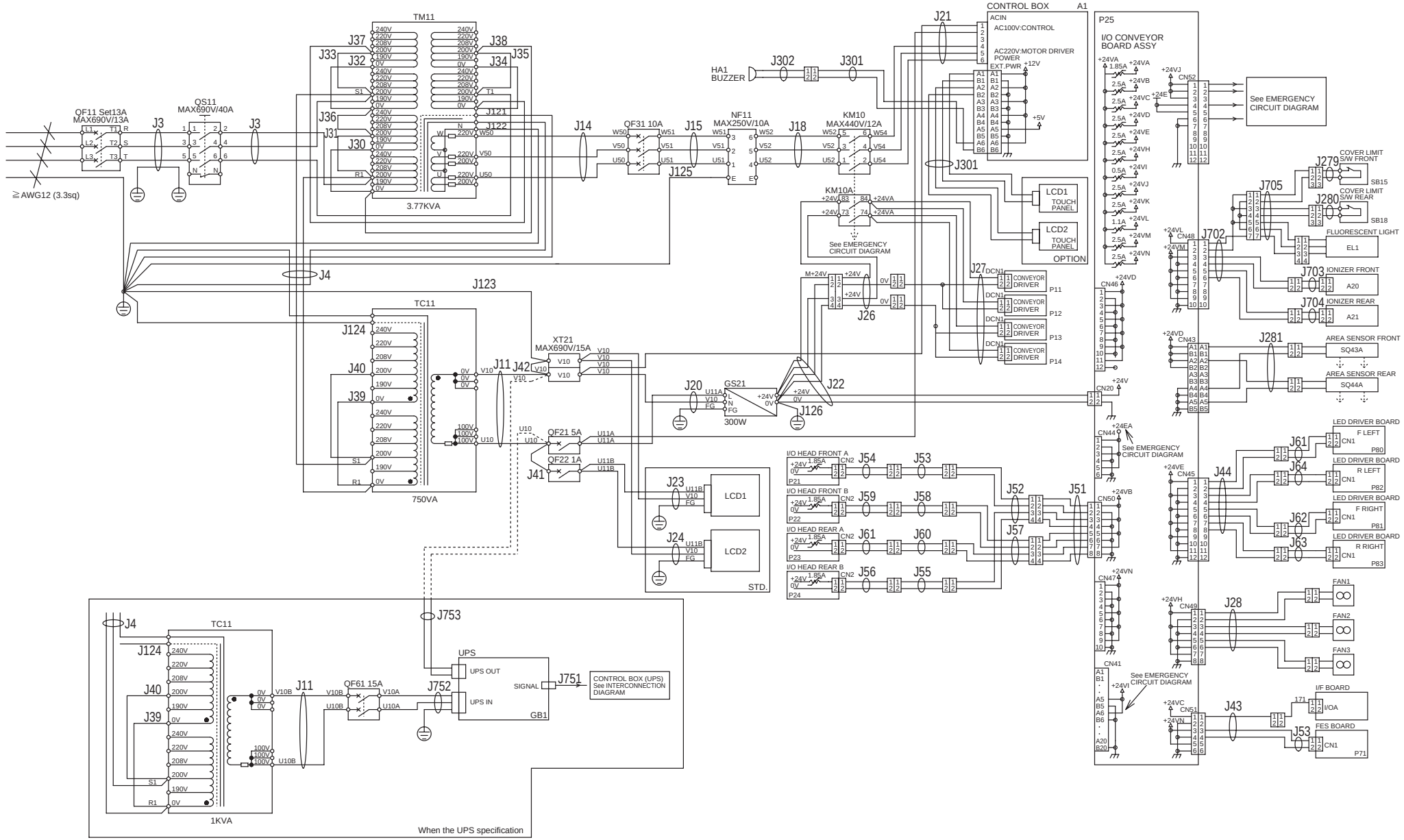

Emergency circuit

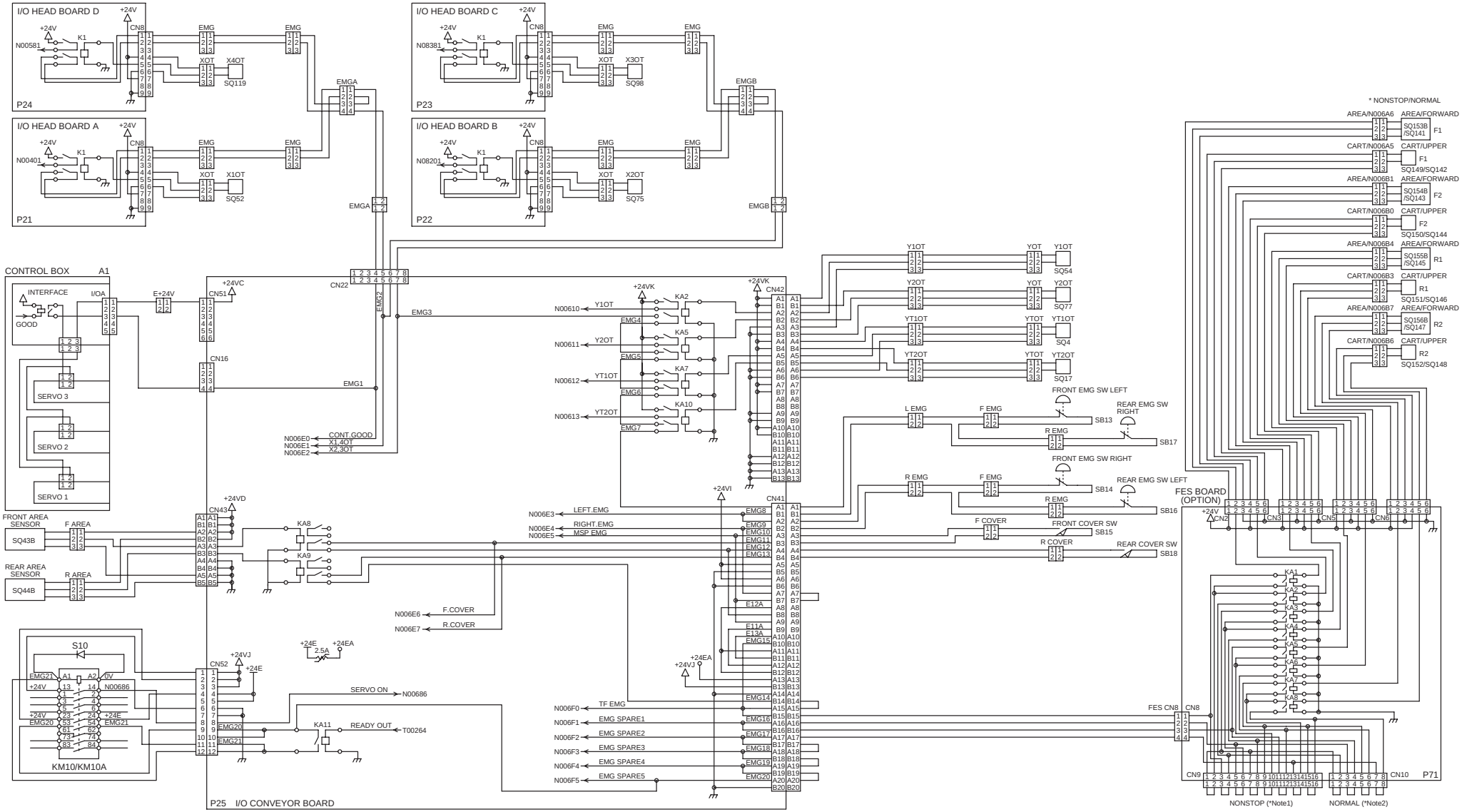

Note1 : For use in nonstop feeder cariage
Note2 : For use in nomal feeder cariage

Air circuit (YG200-F)

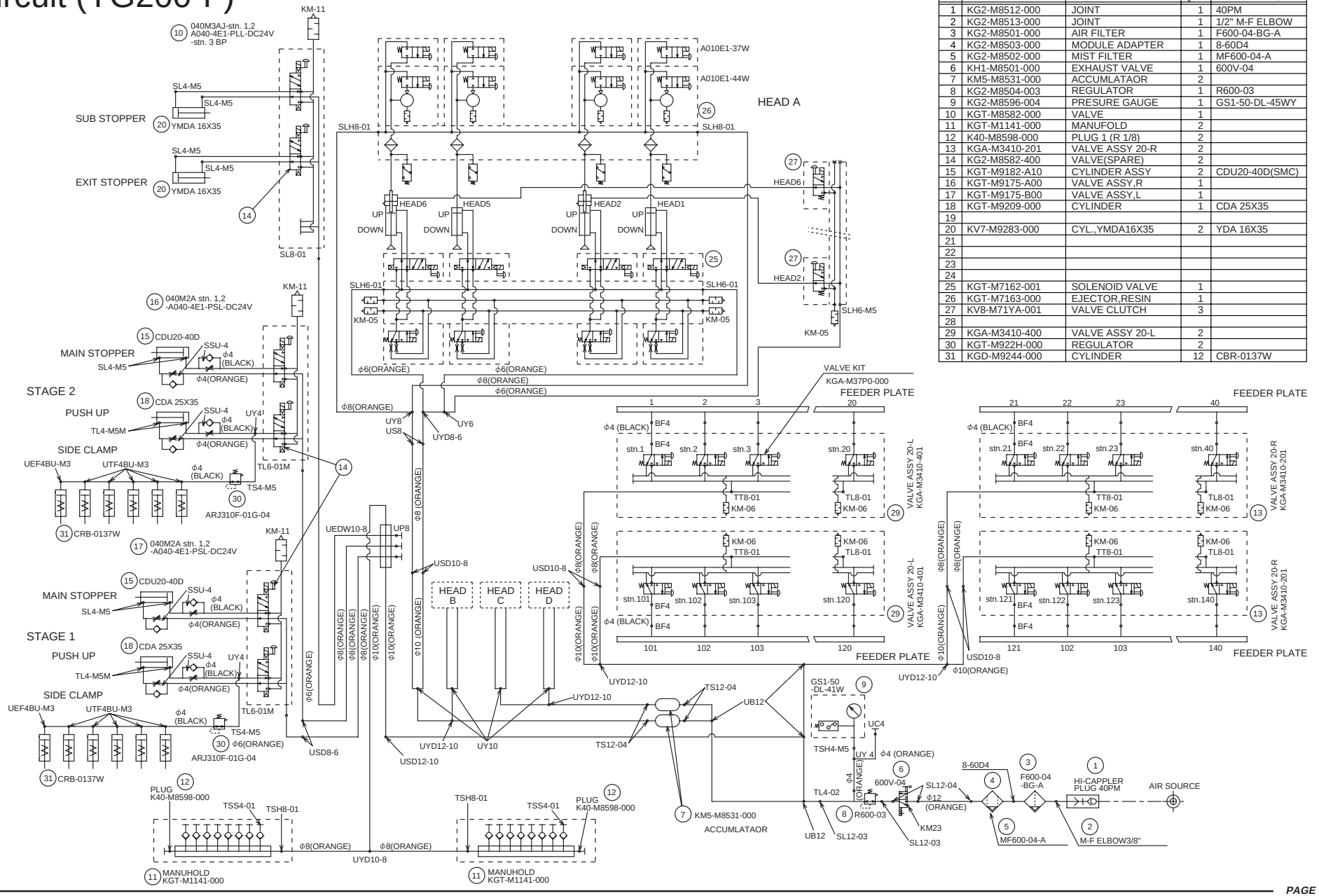

No.	PART No.	PART NAME	Q'TY	REMARKS
1	KG2-M8512-000	JOINT	1	40PM
2	KG2-M8513-000	JOINT	1	1/2" M-F ELBOW
3	KG2-M8501-000	AIR FILTER	1	F600-04-BG-A
4	KG2-M8503-000	MODULE ADAPTER	1	8-60D4
5	KG2-M8502-000	MIST FILTER	1	MF600-04-A
6	KH1-M8501-000	EXHAUST VALVE	1	600V-04
7	KM5-M8531-000	ACCUMLATAOR	2	
8	KG2-M8504-003	REGULATOR	1	R600-03
9	KG2-M8596-004	PRESURE GAUGE	1	GS1-50-DL-45WY
10	KGT-M8582-000	VALVE	1	
11	KGT-M1141-000	MANUFOLD	2	
12	K40-M8598-000	PLUG 1 (R 1/8)	2	
13	KGA-M3410-201	VALVE ASSY 20-R	2	
14	KG2-M8582-400	VALVE(SPARE)	2	
15	KGT-M9182-A10	CYLINDER ASSY	2	CDU20-40D(SMC)
16	KGT-M9175-A00	VALVE ASSY,R	1	
17	KGT-M9175-B00	VALVE ASSY,L	1	
18	KGT-M9209-000	CYLINDER	1	CDA 25X35
19				
20	KV7-M9283-000	CYL.,YMDA16X35	2	YDA 16X35
21				
22				
23				
24				
25	KGT-M7162-001	SOLENOID VALVE	1	
26	KGT-M7163-000	EJECTOR,RESIN	1	
27	KV8-M71YA-001	VALVE CLUTCH	3	
28				
29	KGA-M3410-400	VALVE ASSY 20-L	2	
30	KGT-M922H-000	REGULATOR	2	
31	KGD-M9244-000	CYLINDER	12	CBR-0137W

Air circuit (YG200-S)

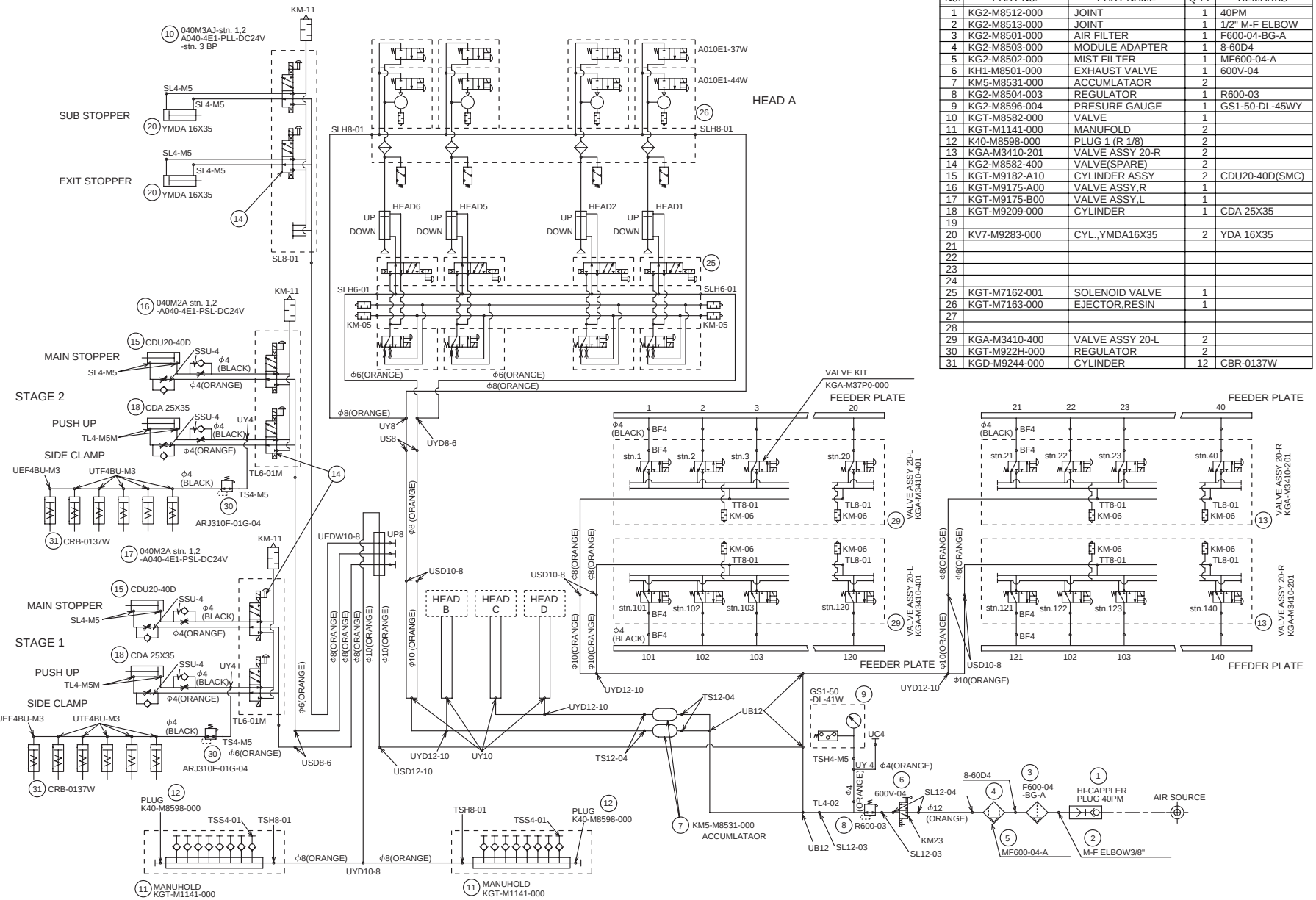

No.	PART No.	PART NAME	Q'TY	REMARKS
1	KG2-M8512-000	JOINT	1	40PM
2	KG2-M8513-000	JOINT	1	1/2" M-F ELBOW
3	KG2-M8501-000	AIR FILTER	1	F600-04-BG-A
4	KG2-M8503-000	MODULE ADAPTER	1	8-60D4
5	KG2-M8502-000	MIST FILTER	1	MF600-04-A
6	KH1-M8501-000	EXHAUST VALVE	1	600V-04
7	KM5-M8531-000	ACCUMLATAOR	2	
8	KG2-M8504-003	REGULATOR	1	R600-03
9	KG2-M8596-004	PRESURE GAUGE	1	GS1-50-DL-45WY
10	KGT-M8582-000	VALVE	1	
11	KGT-M1141-000	MANUFOLD	2	
12	K40-M8598-000	PLUG 1 (R 1/8)	2	
13	KGA-M3410-201	VALVE ASSY 20-R	2	
14	KG2-M8582-400	VALVE(SPARE)	2	
15	KGT-M9182-A10	CYLINDER ASSY	2	CDU20-40D(SMC)
16	KGT-M9175-A00	VALVE ASSY,R	1	
17	KGT-M9175-B00	VALVE ASSY,L	1	
18	KGT-M9209-000	CYLINDER	1	CDA 25X35
19				
20	KV7-M9283-000	CYL.,YMDA16X35	2	YDA 16X35
21				
22				
23				
24				
25	KGT-M7162-001	SOLENOID VALVE	1	
26	KGT-M7163-000	EJECTOR,RESIN	1	
27				
28				
29	KGA-M3410-400	VALVE ASSY 20-L	2	
30	KGT-M922H-000	REGULATOR	2	
31	KGD-M9244-000	CYLINDER	12	CBR-0137W

Air circuit (YG200-F/FES)

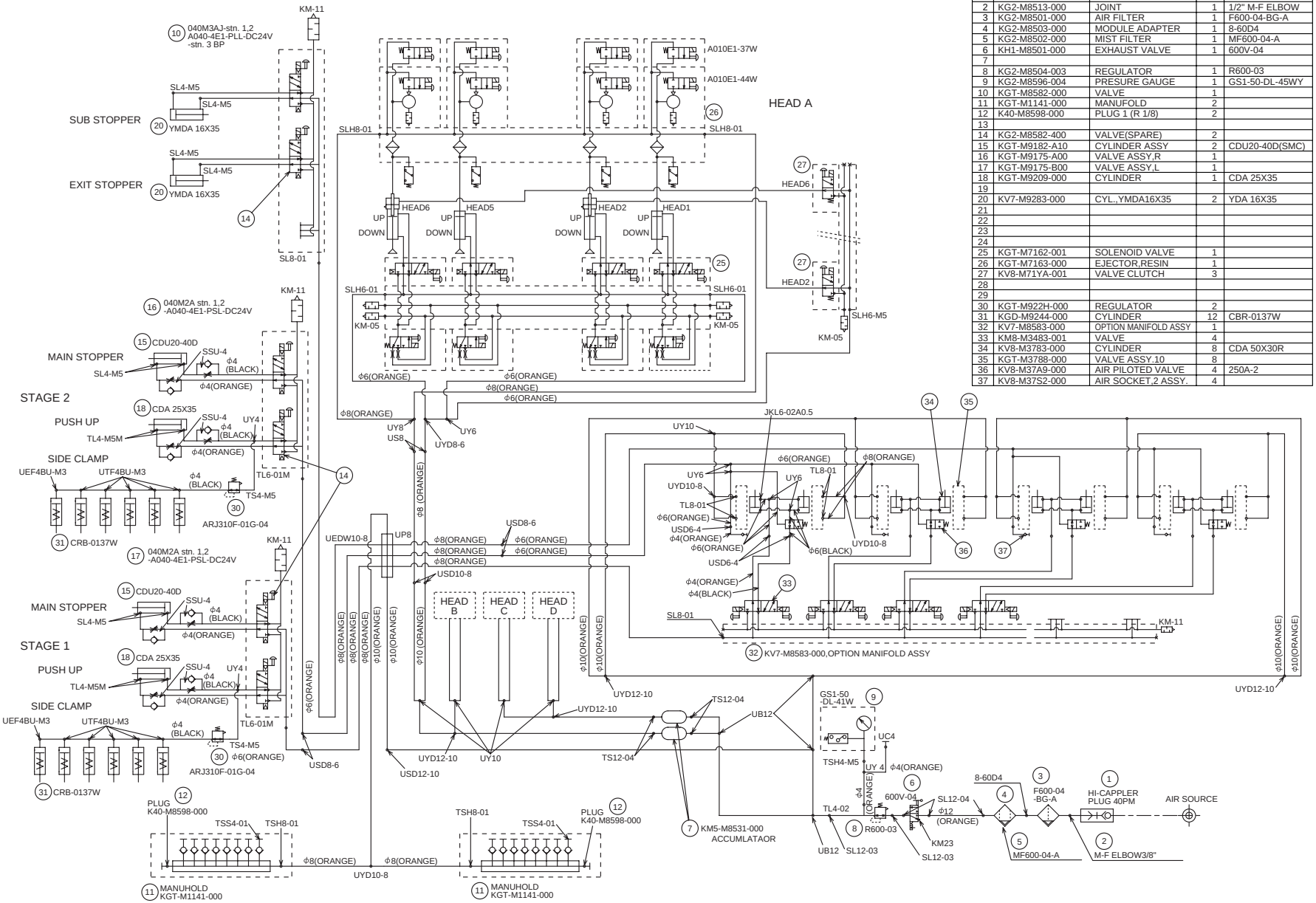

No.	PART No.	PART NAME	Q'TY	REMARKS
1	KG2-M8512-000	JOINT	1	40PM
2	KG2-M8513-000	JOINT	1	1/2" M-F ELBOW
3	KG2-M8501-000	AIR FILTER	1	F600-04-BG-A
4	KG2-M8503-000	MODULE ADAPTER	1	8-60D4
5	KG2-M8502-000	MIST FILTER	1	MF600-04-A
6	KH1-M8501-000	EXHAUST VALVE	1	600V-04
7				
8	KG2-M8504-003	REGULATOR	1	R600-03
9	KG2-M8596-004	PRESURE GAUGE	1	GS1-50-DL-45WY
10	KGT-M8582-000	VALVE	1	
11	KGT-M1141-000	MANUFOLD	2	
12	K40-M8598-000	PLUG 1 (R 1/8)	2	
13				
14	KG2-M8582-400	VALVE(SPARE)	2	
15	KGT-M9182-A10	CYLINDER ASSY	2	CDU20-40D(SMC)
16	KGT-M9175-A00	VALVE ASSY,R	1	
17	KGT-M9175-B00	VALVE ASSY,L	1	
18	KGT-M9209-000	CYLINDER	1	CDA 25X35
19				
20	KV7-M9283-000	CYL.,YMDA16X35	2	YDA 16X35
21				
22				
23				
24				
25	KGT-M7162-001	SOLENOID VALVE	1	
26	KGT-M7163-000	EJECTOR,RESIN	1	
27	KV8-M71YA-001	VALVE CLUTCH	3	
28				
29				
30	KGT-M922H-000	REGULATOR	2	
31	KGD-M9244-000	CYLINDER	12	CBR-0137W
32	KV7-M8583-000	OPTION MANIFOLD ASSY	1	
33	KM8-M3483-001	VALVE	4	
34	KV8-M3783-000	CYLINDER	8	CDA 50X30R
35	KGT-M3788-000	VALVE ASSY.10	8	
36	KV8-M37A9-000	AIR PILOTED VALVE	4	250A-2
37	KV8-M37S2-000	AIR SOCKET,2 ASSY.	4	

Wiring parts list

No	Part No.	Part Name	Q'ty	Remarks
1	KM5-M661E-006	HNS,QF-TM11	1	J3
2	KM6-M661G-002	HNS,TM11-TC11	1	J4
3	KGT-M661G-000	HNS,TC11-QF/XT21	1	J11
4	KW8-M661J-000	HNS,TM11-QF31	1	J14
5	KM6-M661K-000	HNS 1-7 (QF31-NF11)	1	J15
6	KW8-M661L-000	HNS,NF11-KM10	1	J18
7	KGT-M661H-000	HNS,QF21-GS21	1	J20
8	KGT-M661A-000	HNS,C/R_PWR	1	J21
9	KGT-M661E-000	HNS,CONVEYOR_PWR	1	J22
10	KGT-M661F-000	HNS,MONITOR_PWR	2	J23,J24
11	KGT-M661J-000	HNS,CONVEYOR_PWR2	1	J26
12	KGT-M661K-000	HNS,CONVEYOR_PWR3	1	J27
13	KGT-M661L-000	HNS,FAN_PWR	1	J28
14	KM6-M66M1-102	HNS,TAP CHANGE	10	J30,J31,J32,J33,J34,J35.J36,J37,J39,J40
15	KM6-M66M1-202	HNS,TAP CHANGE	1	J38
16	KGA-M662M-001	HNS,U10 JUMPER	1	J41
17	KM6-M66M4-001	HNS 18-4 (JUMPER)	1	J42
18	KGT-M662E-000	HNS,I/F-DC24V	1	J43
19	KGT-M661N-000	HNS,LED.DRIVER_PWR	1	J44
20	KGT-M661X-000	HNS,I/O.HEAD_PWR	1	J51
21	KGT-M661Y-000	HNS,DC24V_Y-FLEX	2	J52,J57
22	KGT-M662A-000	HNS,HEAD.PWR_X-FLEX	4	J53,J55,J58,J60
23	KGT-M661W-000	HNS,DC24V_Z-FLEX	4	J54,J56,J59,J61
24	KV7-M66N3-000	HNS,LIGHT3	4	J62,J63,J64,J65
25	KGT-M665A-000	HNS,CONV._DRIVER	4	J71,J72,J73,J74
26	KGT-M665E-000	HNS,CONV._MOTOR	3	J75,J78,J79
27	KGT-M665U-000	HNS,CONV._MOTOR2	2	J76,J77
28	KGT-M665F-000	HNS,CONV._MOTOR3	1	J80
29	KGT-M665G-000	HNS,CONV._VALVE	1	J81
30	KGT-M665H-000	HNS,VALVE_YT-FLEX	2	J82,J83
31	KGT-M665J-000	HNS,OT	1	J84
32	KGT-M665K-000	HNS,CONV._SENSOR	1	J85
33	KGT-M665L-000	HNS,CONV._SENSOR2	1	J86
34	KGT-M665M-000	HNS,CONV._SENSOR3	1	J87
35	KGT-M665N-000	HNS,CONV._SENSOR4	1	J88
36	KGT-M665R-000	HNS,YTORG/OT_FLEX	2	J89,J91
37	KGT-M665T-000	HNS,SENSOR_CONV3	1	J90
38	KGT-M665V-000	HNS,SENSOR_CONV2	1	J92

No	Part No.	Part Name	Q'ty	Remarks
39	KGT-M665X-000	HNS,CONV._SENSOR5	1	J93
40	KGT-M665W-000	HNS,BRAKE	1	J94
41	KK1-M664J-010	HNS,PE 1000	5	J121,J122,J123,J124,J125
42	90K30-245170	HNS,EARTH	1	J126
43	KV8-M66L1-000	HNS 17-1(700)	1	J127
44	90K30-444070	HNS,EARTH	2	J128,J129
45	90K30-444130	HNS,EARTH	2	J130,J131
46	90K30-444140	HNS,EARTH	4	J132,J133,J134,J135
47	90K30-444080	HNS,EARTH	4	J136<J137,J138,J139
48	KG2-M536A-220	HNS,PE 150	8	J140,J141,J142,J143,J144,J145,J154,J155
49	90K30-444050	HNS,EARTH	4	J146,J147,J148,J149
50	KM0-M536A-010	HNS,PE 70	2	J150,J151
51	KM0-M536A-010	HNS,PE 70	2	J152,J153
52	90K30-444025	HNS,EARTH	4	J156,J157,J158,J159
53	KGT-M668A-000	HNS,I/O_A	1	J171
54	KGT-M668E-000	HNS,I/O_B	1	J172
55	KGT-M668F-000	HNS,CUNET-HEAD_A	1	J173
56	KGT-M668G-000	HNS,CUNET_Y-FLEX	2	J174,J179
57	KGT-M668H-000	HNS,CUNET_X-FLEX	2	J175,J180
58	KGT-M668L-000	HNS,CUNET_HEAD	4	J176,J178,J181,J183
59	KGT-M668K-000	HNS,CUNET_X-FLEX2	2	J177,J182
60	KGT-M66A1-000	HNS,PI1	1	J191
61	KGT-M66A2-000	HNS,PI2	1	J192
62	KGT-M66A3-000	HNS,PI3	1	J193
63	KGT-M66A4-000	HNS,PI4	1	J194
64	KGT-M66A5-000	HNS,PI5	1	J195
65	KGT-M66A6-000	HNS,PI6_SHORT	1	J196
66	KGT-M66A7-000	HNS,Y.YT-PI	4	J197,J198,J209,J210
67	KGT-M66AA-000	HNS,X-PI_Y-FLEX	2	J200,J212
68	KGT-M66AE-000	HNS,Z.R-PI	2	J202,J214
69	KGT-M66AF-000	HNS,Z.R-PI_Y-FLEX	4	J203,J204,J215,J216
70	KGT-M66AG-000	HNS,Z.R-PI_X-FLEX	4	J205,J206,J217,J218
71	KGT-M66AL-000	HNS,R-PI_Z-FLEX	4	J207,J208,J219,J220
72	KGT-M66AJ-000	HNS,YT-PI_YT-FLEX	2	J221,J222
73	KGT-M66AK-000	HNS,W-PI	2	J223,J225
74	KGT-M66AK-100	HNS,W-PI	2	J224,J226
75	KGT-M66F1-000	HNS,MO1	1	J231
76	KGT-M66F2-000	HNS,MO2	1	J232

Wiring parts list

No	Part No.	Part Name	Q'ty	Remarks
77	KGT-M66F3-000	HNS,MO3	1	J233
78	KGT-M66F4-000	HNS,MO4	1	J234
79	KGT-M66F5-000	HNS,MO5	1	J235
80	KGT-M66F6-000	HNS,MO6	1	J236
81	KGT-M66F7-000	HNS,X-MO_Y-FLEX	2	J237,J244
82	KGT-M66F8-000	HNS,Z.R-MO_Y-FLEX	4	J238,J241,J245,J248
83	KGT-M66F9-000	HNS,Z.R-MO_X-FLEX	4	J239,J242,J246,J249
84	KGT-M66FF-000	HNS,R-MO_Z-FLEX	4	J240,J243,J247,J250
85	KGT-M66FE-000	HNS,W-MO_YT-FLEX	2	J251,J252
86	KGT-M66H6-000	HNS,DUMP/AIR	1	J271
87	KGT-M66H7-000	HNS,EMG	1	J272
88	KGT-M66H8-000	HNS,F/R_EMG	2	J273,J274
89	KGA-M667J-002	HNS,EMG SW	4	J275,J276,J277,J278
90	KGA-M667A-003	HNS,COVER LIMIT	1	J279
91	KGT-M66H1-000	HNS,AREA	1	J281
92	KGT-M66H2-000	HNS,CONTACTOR	1	J282
93	KGT-M66H3-000	HNS,EMG_Y-FLEX	2	J283,J287
94	KGT-M66H4-000	HNS,EMG_X-FLEX	4	J284,J288,J291,J292
95	KGT-M66H5-000	HNS,EMG_Z-FLEX	4	J285,J286,J289,J290
96	KGT-M662H-000	HNS,EXT_POWER	1	J301
97	KG2-M669R-111	HNS 9-11 (BUZZER)	1	J302
98	KGA-M66F2-000	C.CABLE ASSY:L6M	4	J303,J304,J308,J309
99	KGA-M66N1-001	HNS,LIGHT1	2	J305,J310
100	KGA-M66F0-000	C.CABLE ASSY	4	J306,J307,J311,J312
101	KGK-M6680-000	HNS,USB-FDD 2M ASSY	1	J313
102	KGA-M669F-010	HNS,USB1	1	J314
103	KGA-M669G-010	HNS,USB2	1	J315
104	KW3-M668J-020	HNS,TOUCH PANEL ASSY	1	J316
105	KU8-M66F5-101	HNS,VGA 1.5M	1	J317
106	KGA-M669E-011	HNS,MSP IN	2	J319,J320
107	KGA-M669H-110	MSP SHORT ASSY	2	J321,J322
108	KGA-M66F4-000	C.CABLE ASSY :1.7M	4	J323,J324,J325,J326
109	KGT-M66G1-000	HNS,F.OPE.PANEL	2	J333,J334
110	KGT-M66G3-000	HNS,AMF	1	J335
111	KGT-M66G4-000	HNS,SIG.TOWER	1	J336
112	KGT-M66G5-000	HNS,SMEMA	1	J337
113	KW3-M66GW-001	HNS,NEXT INTERFACE	1	J338
114	KW3-M66GX-002	HNS,PRE.INTERFACE	1	J339

No	Part No.	Part Name	Q'ty	Remarks
115	KV7-M66V5-010	HNS,24-5(NEXT)	1	J340
116	KV7-M66V4-010	HNS,24-4(PREVIOUS)	1	J341
117	KGT-M66G6-000	HNS,ORG	1	J342
118	KGA-M669V-030	HNS,SWITCH ACTIVE	2	J343,J349
119	KGA-M669V-240	HNS,SWITCH START	2	J344,J350
120	KGA-M669V-320	HNS,SWITCH STOP	2	J345,J351
121	KGA-M669V-420	HNS,SWITCH ERR. CLR.	2	J346,J352
122	KGA-M669V-130	HNS,SWITCH READY	2	J347,J353
123	KGA-M669V-530	HNS,SWITCH RESET	2	J348,J354
124	KV7-M66N2-001	HNS,LIGHT2	4	J355,J356,J361,J362
125	KGA-M66N2-010	HNS,LIGHT2	2	J357,J358
126	KGA-M66N2-020	HNS,LIGHT2	2	J359,J360
127	KV7-M66N5-000	HNS,LIGHT5	2	J363,J364
128	KGT-M66G7-000	HNS,SMEMA_SEL.	1	J365
129	KGT-M66G7-100	HNS,SMEMA_SEL.	1	J366
130	KGT-M66N5-000	HNS,MARKER	4	J401,J407,J413,J419
131	KGT-M653G-100	HNS,SENSOR,4 ASSY	2	J402,J414
132	KGT-M653G-600	HNS,SENSOR,4 ASSY	2	J402,J414
133	KGT-M66N2-100	HNS,HEAD_VALVE	2	J404,J416
134	KGT-M66N3-100	HNS,HEAD_VALVE2	2	J405,J417
135	KGT-M66N3-600	HNS,HEAD_VALVE2	2	J405,J417
136	KGT-M66N4-100	HNS,VAC.SENSOR	2	J406,J418
137	KGT-M653G-000	HNS,SENSOR,4 ASSY	2	J408,J420
138	KGT-M653G-500	HNS,SENSOR,4 ASSY	2	J408,J420
139	KGT-M66N2-000	HNS,HEAD_VALVE	2	J410,J422
140	KGT-M66N3-000	HNS,HEAD_VALVE2	2	J411,J423
141	KGT-M66N3-500	HNS,HEAD_VALVE2	2	J411,J423
142	KGT-M66N4-000	HNS,VAC.SENSOR	2	J412,J424
143	KV8-M66A7-000	HNS 10-7(LED1)	4	J425,J426,J427,J428
144	KGT-M66M1-000	HNS,FEEDER_FLOAT	1	J701
145	KGT-M66M2-000	HNS,LIGHT_PWR	1	J702
146	KV7-M66X4-011	HNS,POWER IONIZER2	2	J703,J704
147	KGT-M66M3-000	HNS,COVER_LIGHT	1	J705
148	KU8-M66F5-301	HNS,VGA 3M	1	J707
149	KU8-M66F5-500	HNS,VGA 5M	1	J708
150	KGA-M6640-001	HNS,SWITCHER IN1 ASS	1	J709
151	KGA-M6640-101	HNS,SWITCHER IN2 ASS	1	J710
152	KGT-M6680-000	HNS,SERIAL 3M ASSY	2	J711,J712

Wiring parts list

No	Part No.	Part Name	Q'ty	Remarks
153	KGT-M6681-000	HNS,SERIAL 2M ASSY	1	J713
154	KGA-M664M-030	HNS,UPS	1	J751
155	KGA-M662F-020	HNS,UPS POWER IN	1	J752
156	KGA-M662G-030	HNS,UPS POWER OUT	1	J753
157	KGT-M66U1-000	HNS,FEEDER1	2	J811,J814
158	KGT-M66U1-100	HNS,FEEDER1	2	J812,J813
159	KGT-M66U2-000	HNS,NONSTOP_VALVE	1	J815
160	KGT-M66U3-000	HNS,NONSTOP_SW	1	J816
161	KGT-M66U4-000	HNS,F_FES	1	J817
162	KGT-M66U5-000	HNS,R_FES	1	J818
163	KV8-M66T1-000	HNS,22-1(I/O,FDR & D	4	J819,J823,J827,J831
164	KV8-M66T2-002	HNS,22-2(I/O FEEDER)	4	J820,J824,J828,J832
165	KV8-M66T4-005	HNS,22-4	4	J821,J825,J829,J833
166	KV8-M66T3-000	HNS,22-3(I/O,FEEDER)	4	J822,J826,J830,J834
167	KGA-M66R1-000	HNS,FES SENSOR(NON)	4	J837,J838,J839,J840
168	KGA-M66R8-000	HNS,NON.SHORT	1	J841
169	KGA-M66RF-000	HNS,FES SENSOR(NORM)	2	J846,J847
170	KGA-M66RF-100	HNS,FES SENSOR(NORM)	2	J848,J849
171	KGA-M66R9-000	HNS,NORMAL.SHORT	1	J850
172	KGT-M66U4-100	HNS,F_FES	1	J851
173	KGT-M66U5-100	HNS,R_FES	1	J852
174	KGK-M6640-00X	HNS, KEY / MOUSE ASSY.	1	J318